for mines M2, gas G and dust D atmospheres

ATEX Marking:
CE Ex I M2 Ex d I Mb
CE Ex II 1/2 G Ex d II C T… Ga/Gb
CE Ex II 1/2 D Ex ta/tb IIIC T... Da/Db

EAC Ex Marking:
PB Ex d I Mb X
Ga/Gb Ex d IIC T..X
Ex ta/tb IIIC T..Da/Db X

TECHNICAL DATA

Description

- flameproof for mines M2, gas G and dust D atmospheres
- single and double RTD
- exchangeable mineral insulated measuring insert
- connection head types: XD-AD (**GW1, GW2**); XD-ADwin (**GW3, GW4**); XD-SD (**S1, S2**); IP65, ATEX II 2 GD (see technical information)
- thermowell to weld-in, to high pressures ∅18h7, ∅24h7*
- cable gland ATEX I M2, II GD, IP65; (cable dia. 5..10mm)*
- output signal: RTD or 4-20mA (option)
- local display LPI-02 (option)

Design temperature range

-200 .. +550°C

Sensing element

1x or 2xPt100	acc. to EN 60751 class A, B

Thermowell

Material	1.7335, 1.7380 or other*
Diameter [mm]	Ø18h7 (SW1); Ø24h7 (SW2)
Length L/C [mm]	100/35, 140/65, 200/65 – **SW1** 140/65, 200/65, 260/65 – **SW2**

Temperature transmitter (option)

PR5333A, PR5335A (HART®), PR5350A (Profibus®PA),
FlexTop2211, FlexTop2221 (HART®), FlexTop2231 (Profibus®PA)

Remarks

* other parameters on request
* local display LPI-02 (see technical information)

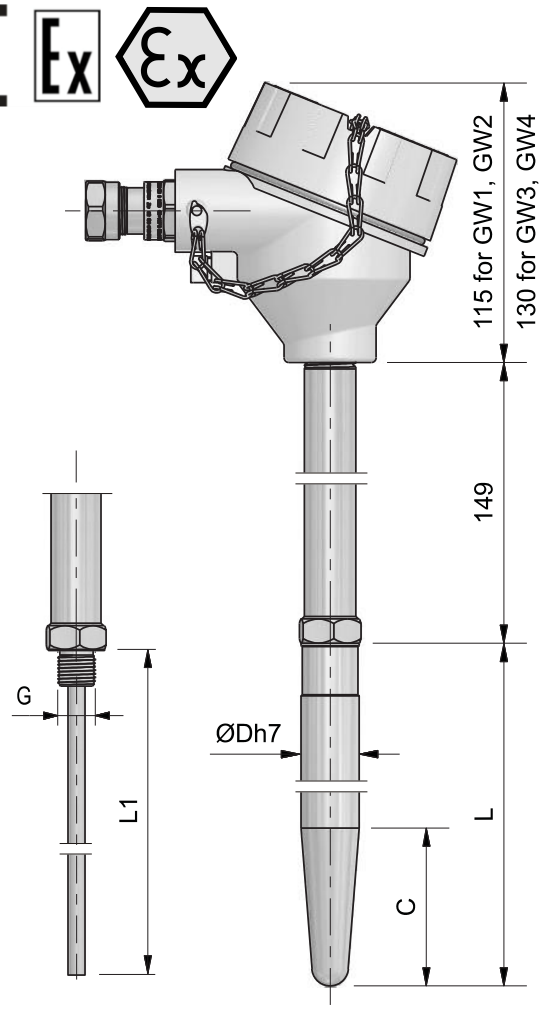

XD-..TOPSW
(without thermowell)

XD-..TOPSW
(with thermowell)

ORDERING CODE

Temperature sensor **XD -** [ ] [ ] **TOPSW -** [ ] - [ ] - [ ] - [ ] - [ ] - [ ] - [ ] - [ ] - [ ]

- without transmitter: **without mark**
  with transmitter: **AP**
  with two transmitters: **2AP**
- single: **without mark**
  double: **2**
- connection head type: **GW1**, **GW2**, **GW3**, **GW4**, **S1**, **S2**
- length L [mm]: **100/35**, **140/65**, **200/65**, **260/65** or other*
- diameter [mm]: **18** (SW1), **24** (SW2) or other*
- thermowell material: **1.7335**, **1.7380** or other*
- RTD class: **A**, **B**
- connection line: **2**-, **3**-, **4**-wire for 1xPt100; **2**-, **3**-wire for 2xPt100
- measuring range for transmitter output 4-20 mA: **(...)**°C
- transmitter type **(see specification)**
- diameter of supply cable (for cable other than) 5..10mm **(...)**

EXAMPLE:
Temperature sensor XD-TOPSW-GW1-140/65-18-1.7335-A-4
Temperature sensor XD-APTOPSW-GW1-200/65-24-1.7380-A-3-(0-400)°C-PR5333A

Zębice, ul. Rzemieślnicza 4, 55-010 Święta Katarzyna, tel. +48 71 311-58-60, 311-38-47, fax. +48 71 311-37-17, 311-38-42, www.termoaparatura.com.pl